AIWA CT-R 429M/R 409/R 419 SCHEMATIC DIAGRAM _ 1

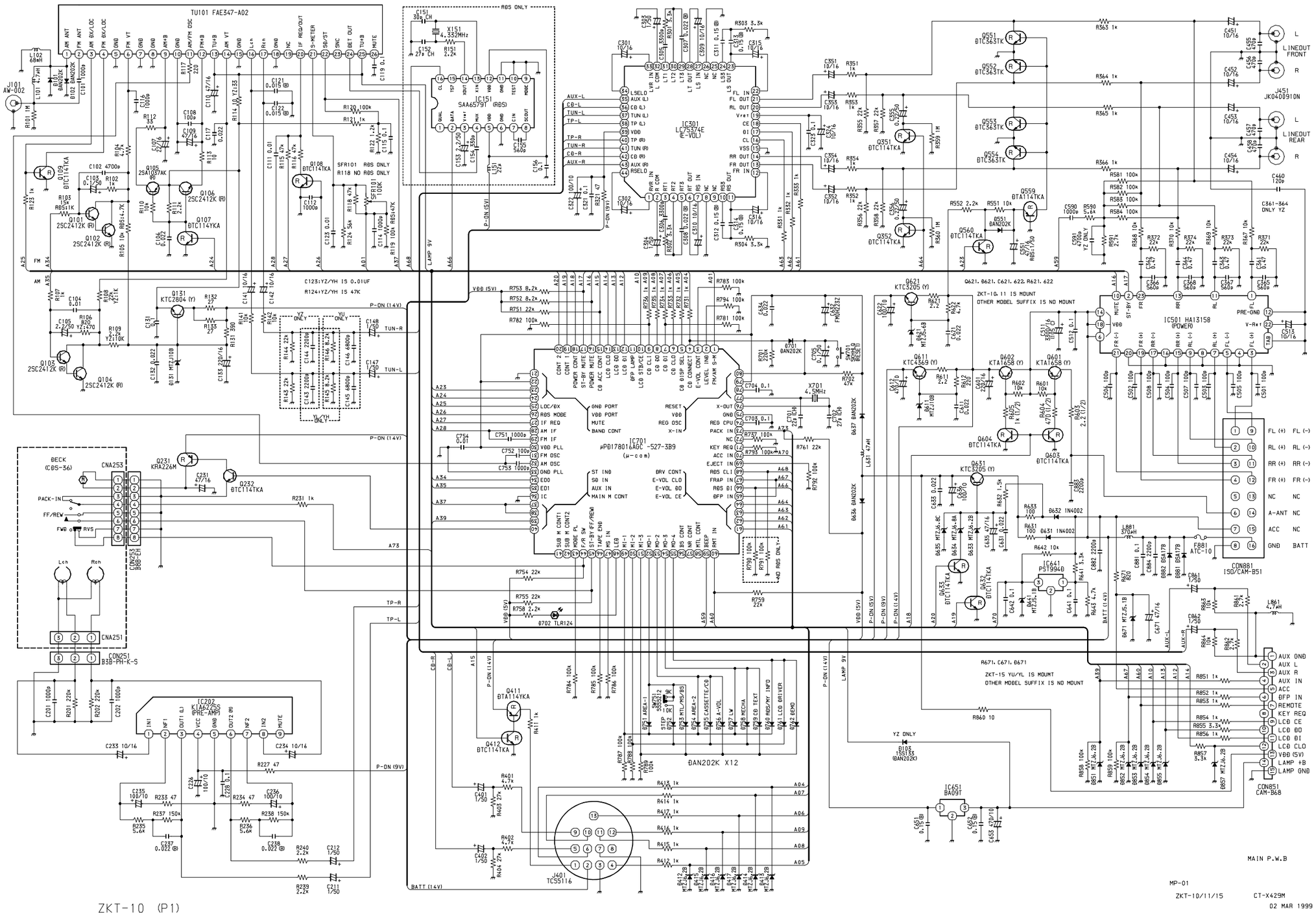

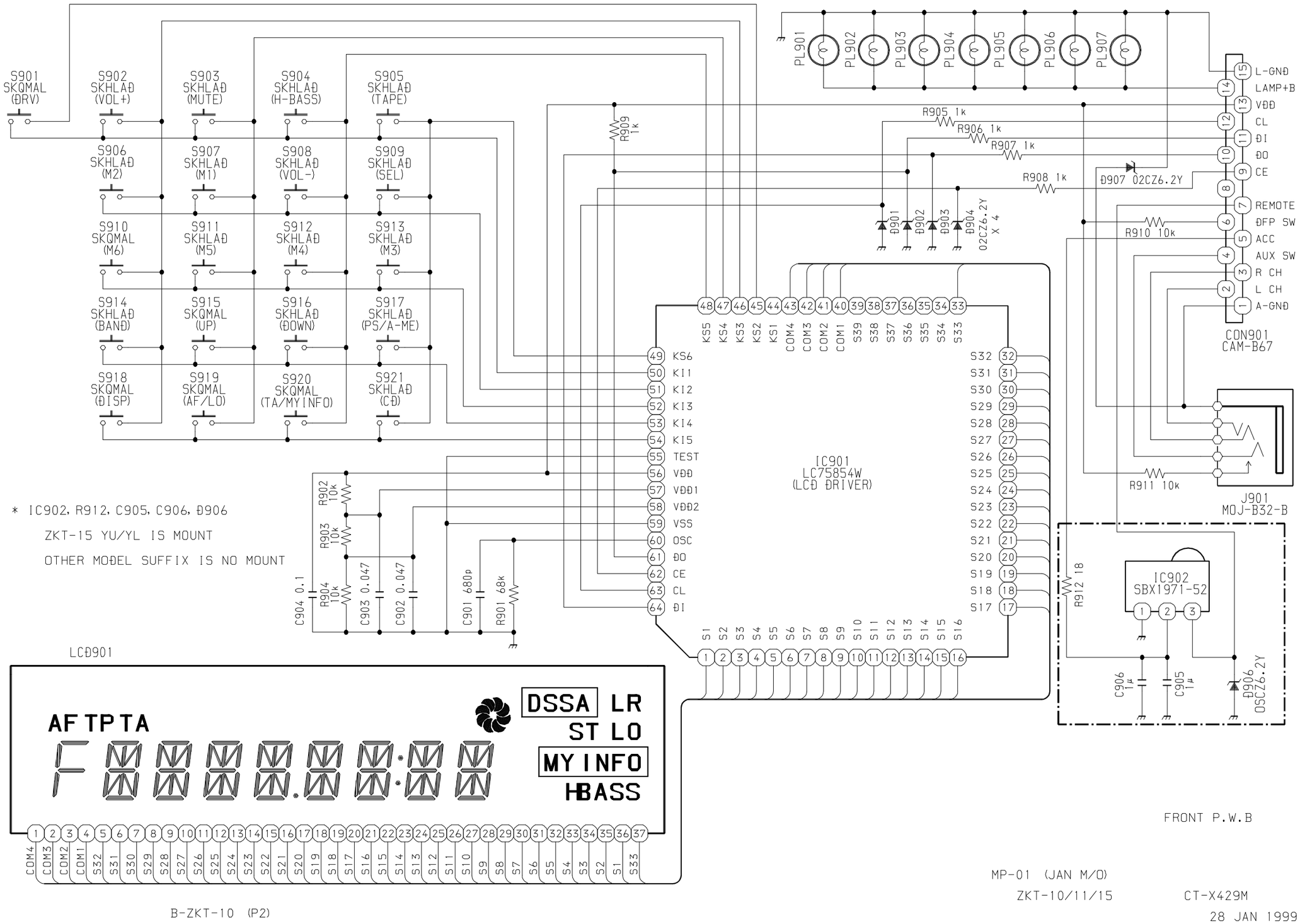

FRONT P.W.B

MP-01 (JAN M/O)

ZKT-10/11/15

CT-X429M

28 JAN 1999

B-ZKT-10 (P2)