SCHEMATIC DIAGRAM OF MOTHER UNIT (K7240N7), 01 Version.

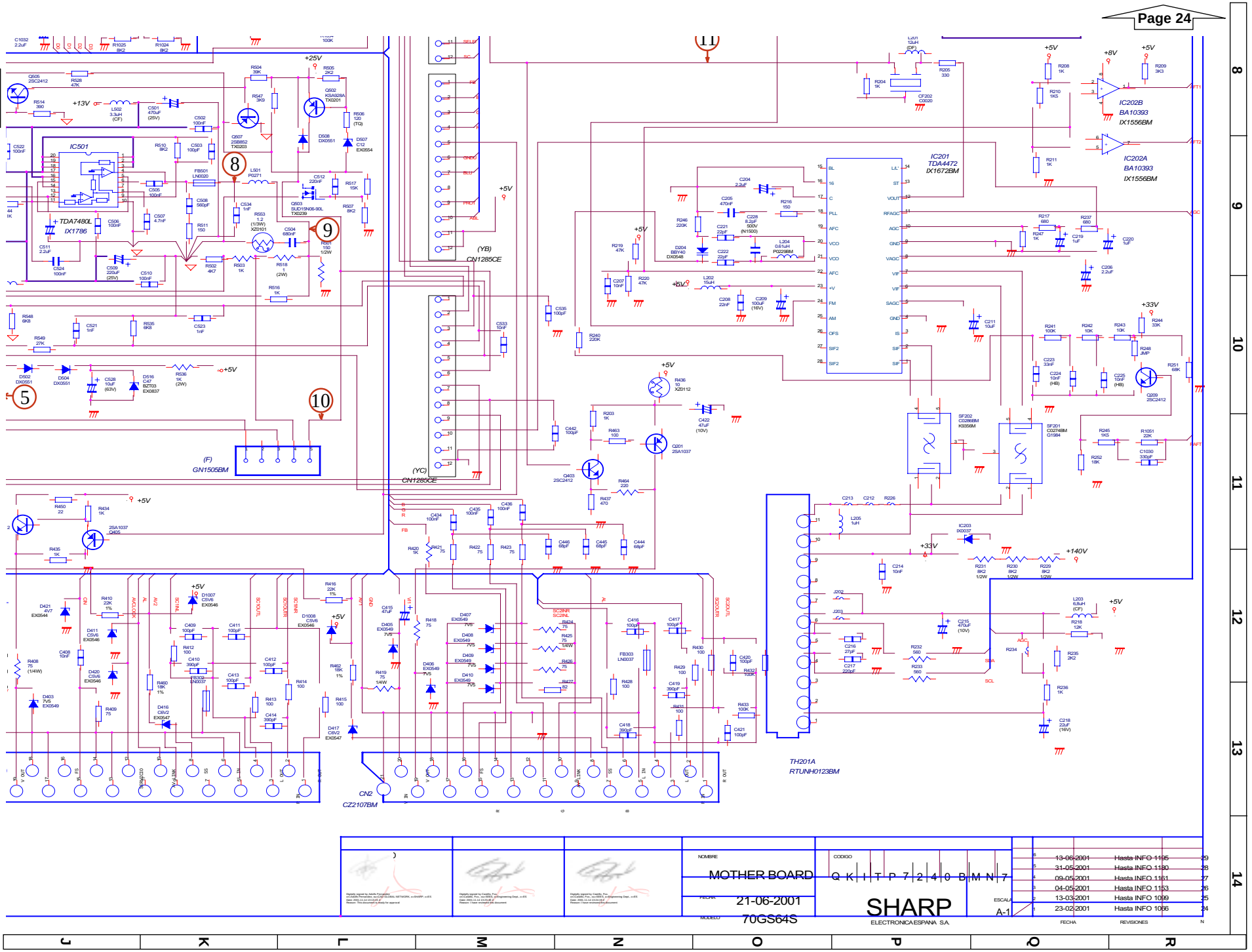

70GS-64S

SCHEMATIC DIAGRAM OF DIGITAL MODULE UNIT (F7313NOA), 01 Version.

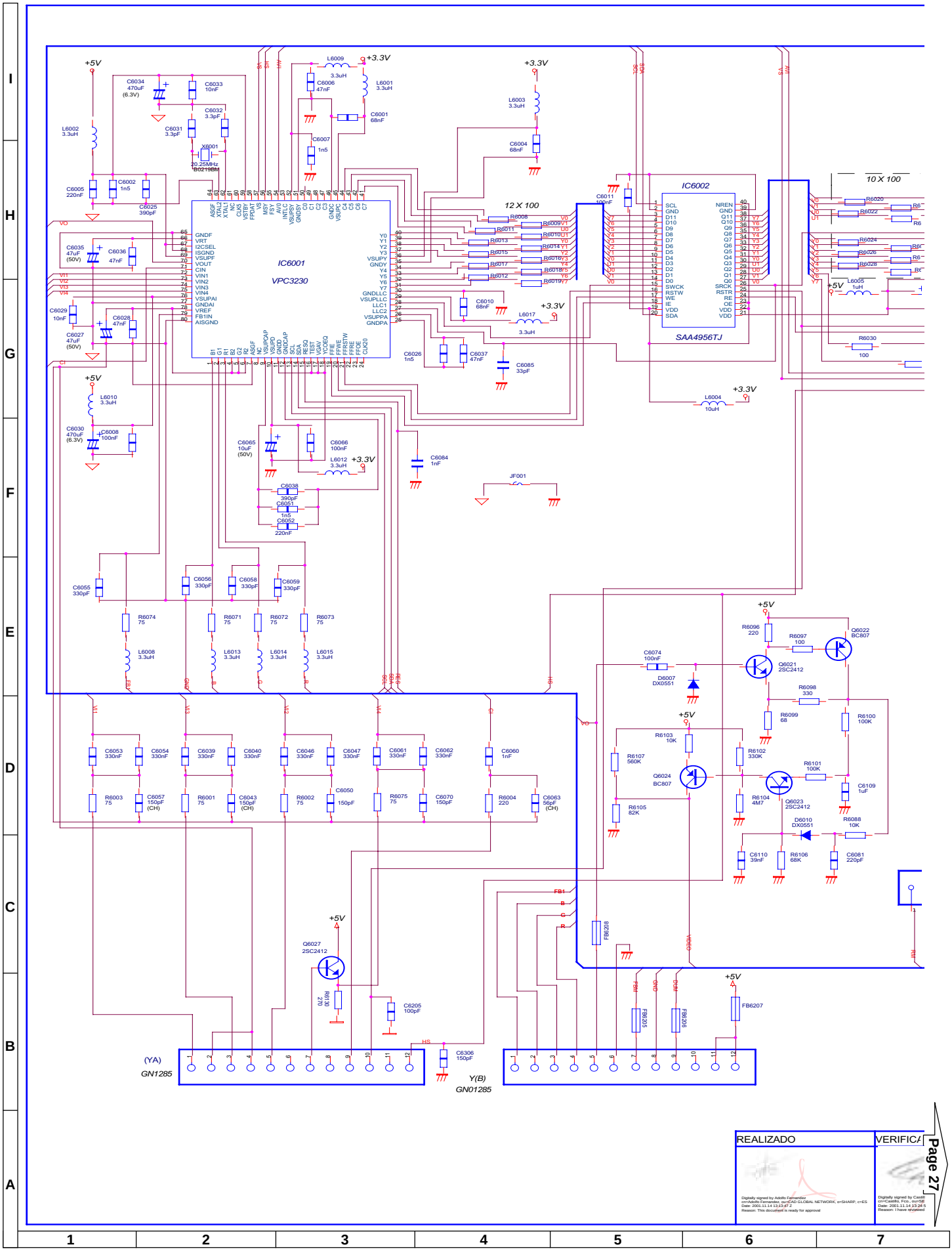

SCHEMATIC DIAGRAM OF DIGITAL MODULE UNIT (F7313NOA), 01 Version.

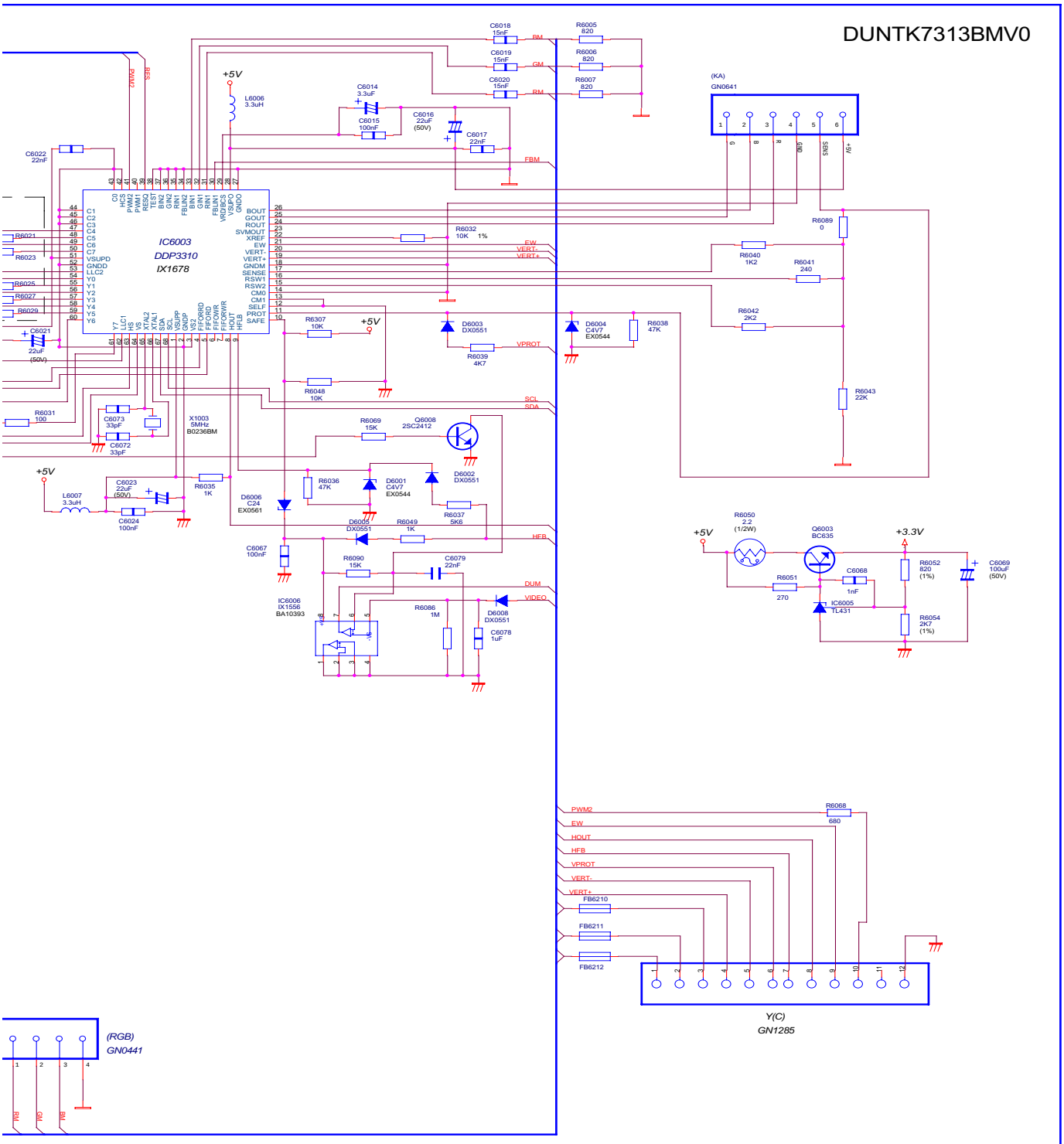

FICADO	APROBADO	NOMBRE	CODIGO	6	11-06-2001	HASTA INFO 1189	9
by Castillo, Fco. o, ou=SBES, o=Engineering Dept., c=ES 14 13:24:53 Z reviewed this document	Digitally signed by Castillo, Fco. cn=Castillo, Fco., ou=SBES, o=Engineering Dept., c=ES Date: 2001.11.14 13:25:20 Z Reason: I have reviewed this document	MODULO DIGITAL	Q K I T P 7 3 1 3 B M N 0 A	5	13-02-2001	HASTA INFO 1046	8
				4	12-01-2001	HASTA INFO 1012	7
				3	15-12-2000	HASTA INFO 989	6
		FECHA 20-06-2001	SHARP ELECTRONICA ESPANA S.A.	ESCALA A-2	2	21-11-2000	HASTA INFO 948	5
		MODELO 70GS64S			1	21-07-2000	HASTA INFO 776	4
					FECHA	REVISIONES	N

Page 26

SCHEMATIC DIAGRAM OF PFC UNIT (F7336N2), 00 Version.

DUNTK7336BMV0

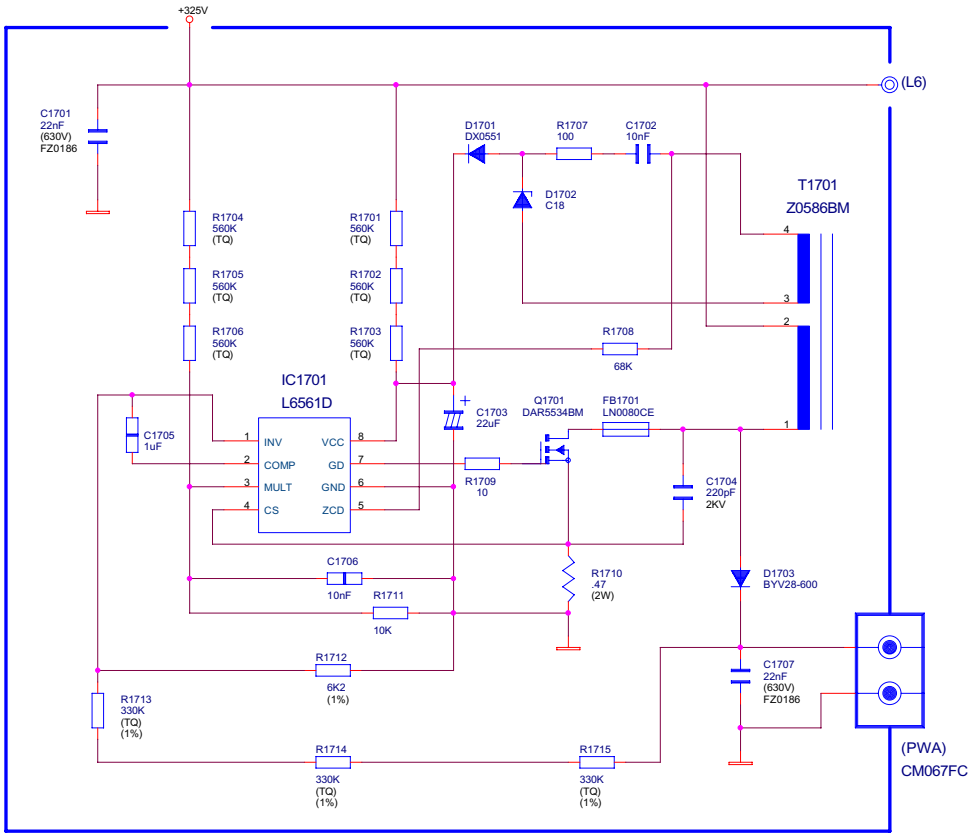

REALIZADO	VERIFICADO	APROBADO	NOMBRE	CODIGO
Digitally signed by Adolfo Fernandez cn=Adolfo Fernandez, ou=EAD GLOBAL NETWORK, o=SHARP, c=ES Date: 2001.11.14 13:14:12 Z Reason: This document is ready for approval	Digitally signed by Castillo, Fco. cn=Castillo, Fco., ou=SEES, o=Engineering Dept., c=ES Date: 2001.11.14 13:25:44 Z Reason: I have reviewed this document	Digitally signed by Castillo, Fco. cn=Castillo, Fco., ou=SEES, o=Engineering Dept., c=ES Date: 2001.11.14 13:26:21 Z Reason: I have reviewed this document	Modulo PFC	Q P W B F 7 3 3 6 B M N 2
			FECHA 09-07-2001	SHARP ELECTRONICA ESPANA S.A.
			MODELO 70GS64S	ESCALA A-4

N	FECHA	REVISIONES
6	22-03-2001	HASTA INFO 1116
5	14-03-2001	HASTA INFO 1103
4	15-12-2000	HASTA INFO 991
3	15-12-2000	HASTA INFO 990
2	22-11-2000	HASTA INFO 953
1	18-10-2000	HASTA INFO 879

STEREO LED FLASHING CODES.

If the TV set does not work and the stereo led is flashing, follow the sequence according to the information below, as a guide to fault finding.

1. **Unable to read or write into NVM:** 66% ON, 33% OFF twice and OFF for a second.

2. **MSP failure:** 66% ON, 33% OFF for three times and OFF for a second.

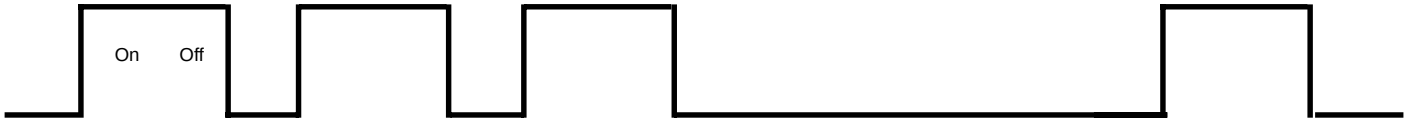

3. **VPC failure:** 66% ON, 33% OFF for four times and OFF for a second.

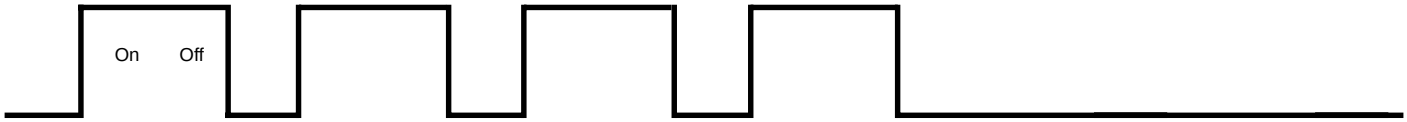

4. **SAA4956 failure:** 66% ON, 33% OFF for six times and OFF for a second.

5. **DDP failure:** 66% ON, 33% OFF for seven times and OFF for a second.

BLOCK DIAGRAM .

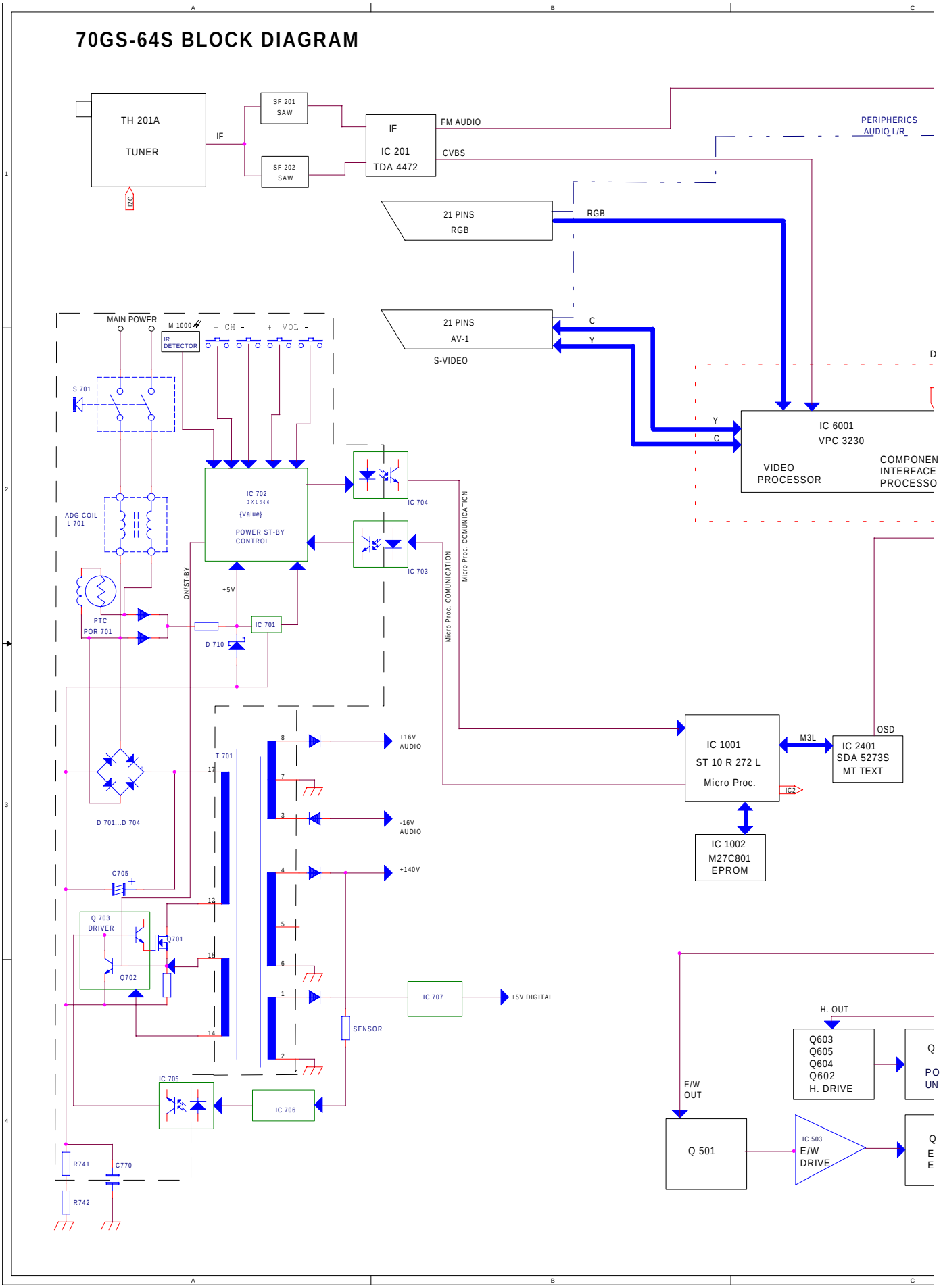
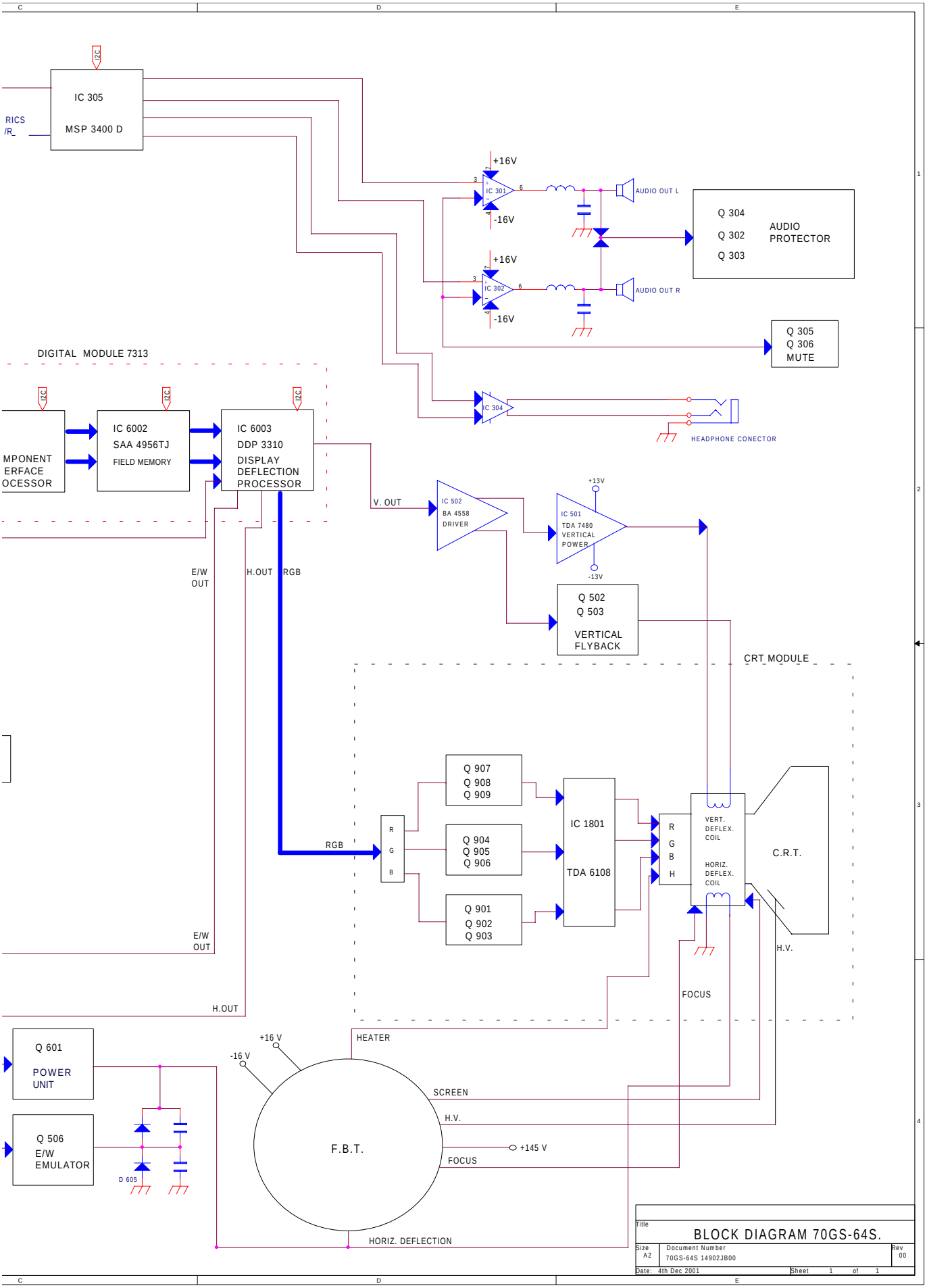
BLOCK DIAGRAM .